air tools

PARTS LIST

■ *Chipping Hammer*
【Model】AA30 , AA20

nks air tools
株式会社中谷機械製作所
NAKATANI KIKAI CO.,LTD.
MADE IN JAPAN

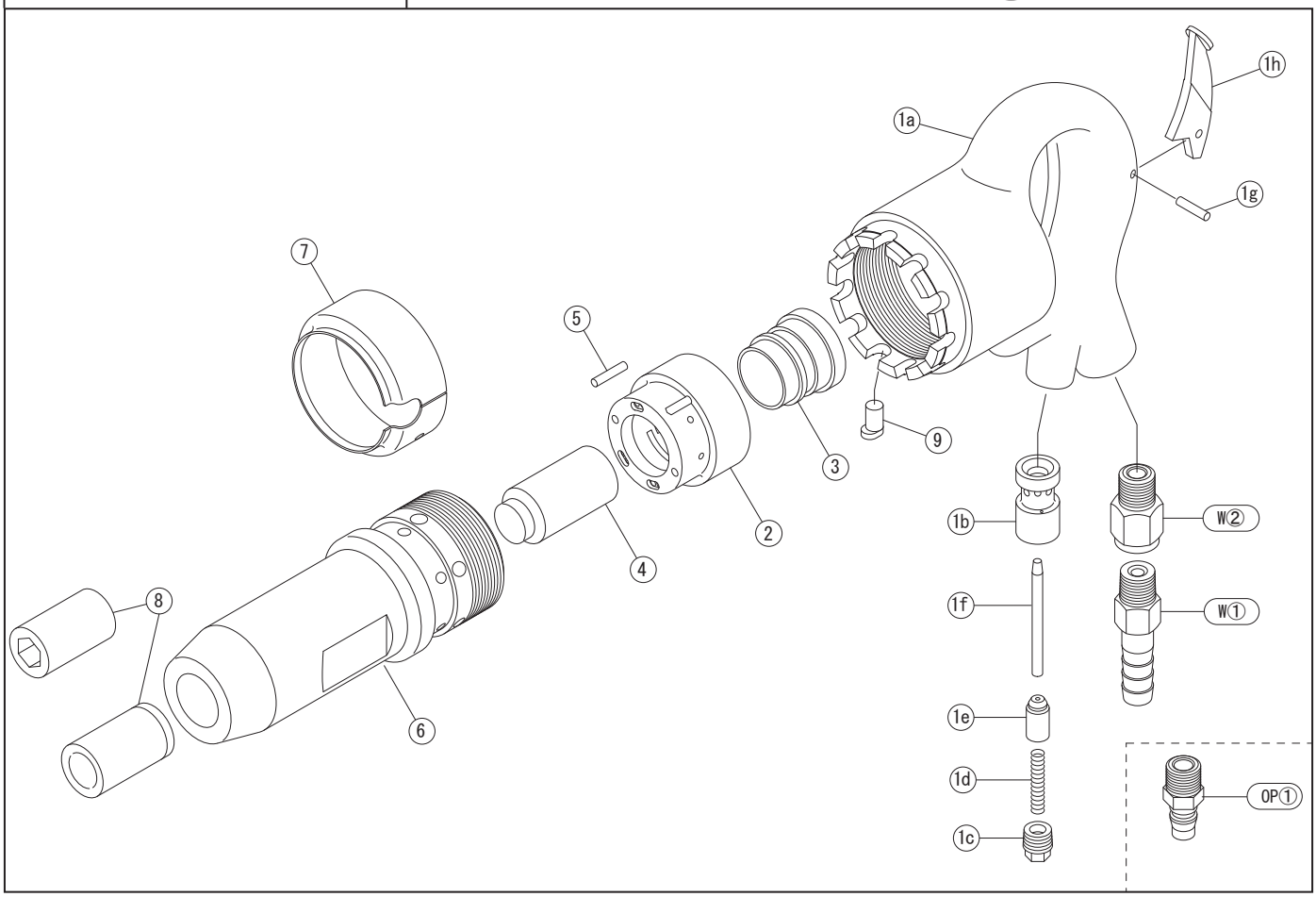

No.	Code	Name Of Part	Q'ty			No.	Code	Name Of Part	Q'ty		
		<AA30>						<AA20>			
1	C2304	Handle Assy	1			*4	2317	Piston	1		
1a	2304	Handle	1			*6	2324	Cylinder	1		
1b	2306	Throttle Valve Bush	1					(Option)			
1c	2007	Throttle Cap	1			OP①	9106	Coupling PM23	1		
1d	9201	Throttle Spring 6*34(0.6)	1								
1e	2009	Throttle Valve	1								
1f	2308	Throttle Pin #70,71,73	1								
1g	9518	Throttle Lever Pin 4*12.8	1								
1h	2310	Throttle Lever	1								
2	2312	Valve Box	1								
3	2314	Valve	1								
*4	2318	Piston <AA30>	1								
5	2320	Valve Pin 3.8*34	1								
*6	2326	Cylinder <AA30>	1								
7	2329	Exhaust Cover	1								
8	2130	Cylinder Bush (Round)	1								
〃	2131	Cylinder Bush (Hex.)	1								
9	2332	Handle Knock	1								
W①	9035	Hose Nipple(B) 3/8-1/2	1								
W②	9058	Inlet Bush 3/8-3/8	1								