CD81
Flame Proof Type Differential Pressure Switch

Overview

This is a Flame Proof Type Differential Pressure Switch that has higher pressure resistance than the previous product and can adjust the deadband, and moreover has acquired the international certification system "IECEx".

Features

- **Obtain certification under the IECEx System, an international certification system**
- **Japan: TIIS※1, Korea: KOSHA※2, Europe: ATEX Acquisition of Certification**
- **Proof pressure against single port: Max. 20MPa (50kPa and below: 8MPa)**
- **Air vent is located on the front**
- **Compatible with liquid differential pressure measurement (Diaphragm material for water measurement: EPDM specification recommended※3)**

※1: Public Interest Incorporated Association ; Technology Institution of Industrial Safety
※2: Korea Occupational Safety and Health Agency
※3: When measuring water, EPDM is recommended as the wetted material, but avoid using it in aqueous solutions that significantly affect the changes in characteristics of EPDM.

Recommended pressure setting range
Pressure setting range varies by pressure range, please refer to the specifications.

*When selecting differential pressure switches, Please select a differential pressure range with normal operation pressure within 30 to 65% of full span to get full performance. Also check whether wetted parts material could be used for gases or liquids to be measured. When the liquids to be measured is water, please check whether or not the water treatment agent is suitable for the wetted parts material (Especially NBR).

Specifications 1

Item	Description
Certifications (Symbol)	IECEx: Ex db IIB+H_2 T5 Gb / TIIS: Ex d IIB+H_2 T5 Gb / KOSHA: Ex d IIB+H_2 T5 / ATEX: Ⓔx II 2 G Ex db IIB+H_2 T5 Gb
Media※2	Gas, liquid (No freezing)
Mounting type	Panel mounting, 2B pipe mounting
Connection	Rc1/4
Wetted parts	Diaphragm Buna N® or EPDM※1 Body (Flange) SUS316 O-ring NBR or EPDM※1 Spring SUS304
Differential pressure range	5 to 25kPa, 10 to 50kPa, 0.02 to 0.1MPa → 0.4 to 2MPa
Basic pressure / Single withstand pressure	50kPa and below: 8MPa / 0.1MPa and above: 20MPa
Operating temperature range	IECEx / KOSHA / ATEX: -20 to 60℃ (No freezing), TIIS: -20 to 40℃ (No freezing)
Accuracy	±1.5%max.P.
Deadband	8 to 15%max.P. Adjustable
Temperature coefficient	0.05%max.P./℃
Number of contacts	One contact (SPDT), Two contacts (DPDT)※3
Withstand voltage	2000V AC, 1 minute, Between terminal and case
Insulation resistance	DC500V megger, 100MΩ or higher, Between terminal and case
Setting Method	Internally adjustable
Outlet for electric wire	IECEx / KOSHA / ATEX: Conduit type 3/4NPT, M25×1.5 TIIS: Flameproof packing type G3/4, G1/2
Case material, finishing	AC7A, ADC12・Blue / Gray with acid corrosion proof painted
Protection	IP66
Applicable standard	IEC 60079-0: 2011 IEC 60079-1: 2014 Internationally hermonized explosion-proof guidelines 2015
Weight	Approx. 15.5kg (Panel mounting, Range 50kPa and below), Approx. 11kg (Panel mounting, Range 0.1MPa and above)

※1 When measuring water, EPDM is recommended as the wetted material, but avoid using it in aqueous solutions that significantly affect the changes in characteristics of EPDM.
※2 Use only non-flammable fluids for measurement.
※3 Two contacts are operated simultaneously.

Specifications 2

Electrical characteristic:

Switch	Rating			Withstand voltage	Insulation resistance
		Resistance load	Inductive load		
General type with one contact	125V AC	20 A	20 A	2000V AC Between terminal and case 1 minute	DC500V megger 100MΩ and above Between terminal and case
	250V AC	20 A	20 A		
	125V DC	0.5 A	0.05 A		
	250V DC	0.25 A	0.03 A		
Direct current type with one contact	125V AC	10 A	6 A		
	250V AC	3 A	1.5 A		
	125V DC	10 A	6 A		
	250V DC	3 A	1.5 A		
Simultaneously operating type with two contacts	125V AC	10 A	6 A		
	250V AC	10 A	4 A		
	125V DC	0.5 A	0.05 A		
	250V DC	0.25 A	0.03 A		

・Inductive load: Power factor 0.4 or over (AC) Time constant 7ms and below (DC)
※ Direct current type with one contact: For general purpose, those ratings increased DC.

Pressure range and deadband・Proof pressure・Wetted parts:

Differential pressure range	Deadband (Adjustable type) One contact・Two contacts For all types	Basic pressure Pressure loaded one side Pressure loaded two sides	Wetted parts			
			Diaphragm	O-ring	Body	Spring
5 to 25kPa	2.0 to 3.7kPa	8MPa	Buna N® or EPDM	NBR or EPDM	SUS316	SUS304
10 to 50kPa	4.0 to 7.5kPa					
0.02 to 0.1MPa	0.008 to 0.015MPa	20MPa				
0.04 to 0.2MPa	0.016 to 0.030MPa					
0.06 to 0.3MPa	0.024 to 0.045MPa					
0.08 to 0.4MPa	0.032 to 0.060MPa					
0.1 to 0.5MPa	0.040 to 0.075MPa					
0.12 to 0.6MPa	0.048 to 0.090MPa					
0.16 to 0.8MPa	0.064 to 0.120MPa					
0.2 to 1MPa	0.080 to 0.150MPa					
0.3 to 1.5MPa	0.120 to 0.225MPa					
0.4 to 2MPa	0.160 to 0.300MPa					

How to select effective operating differential pressure range
・Set value is accurate and stable: 40%max.P. and above
・Maintain long life: 65%max.P. and below
・Set value is accurate maintaining long life (ideal): 30 to 65% of adjustable range

In the right figure
Range 1. Effective range both for accuracy and long life
Range 2. Effective range for maintaining accuracy
Range 3. Effective range for maintaining long life

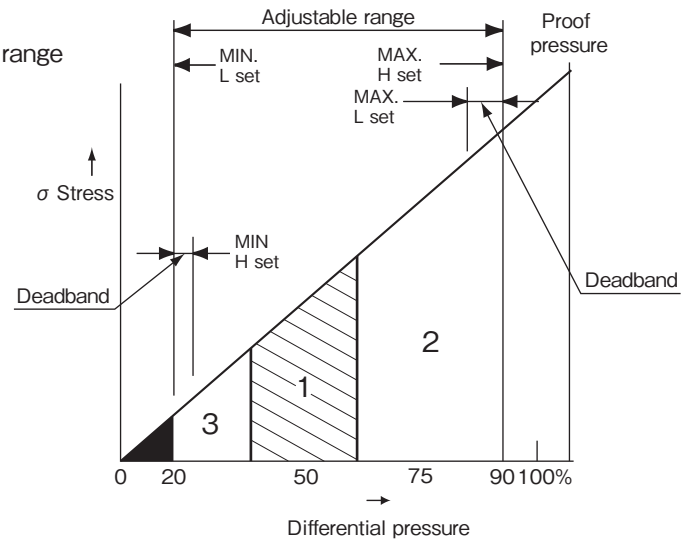

Dimensions 1

Unit: mm

Differential pressure range: 0.1MPa and above

IECEx/KOSHA/ATEX (Outlet for electric wire: Conduit type)

Panel mounting

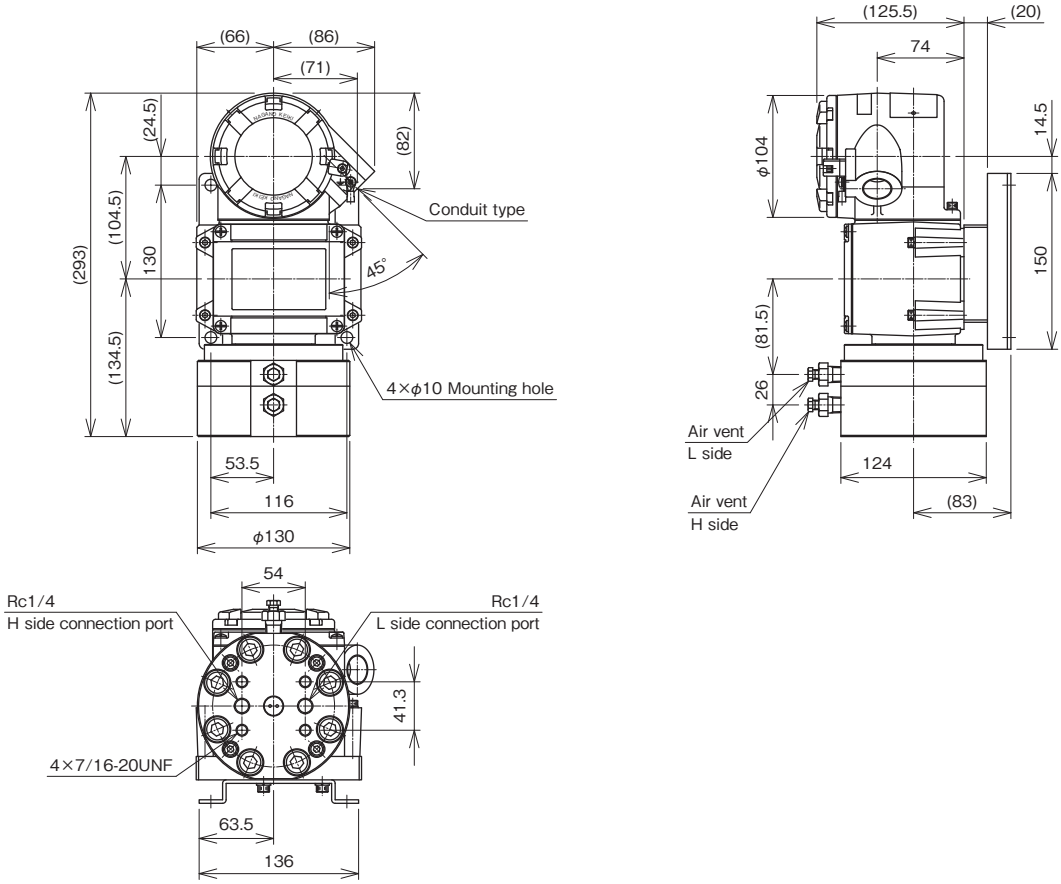

2B pipe mounting

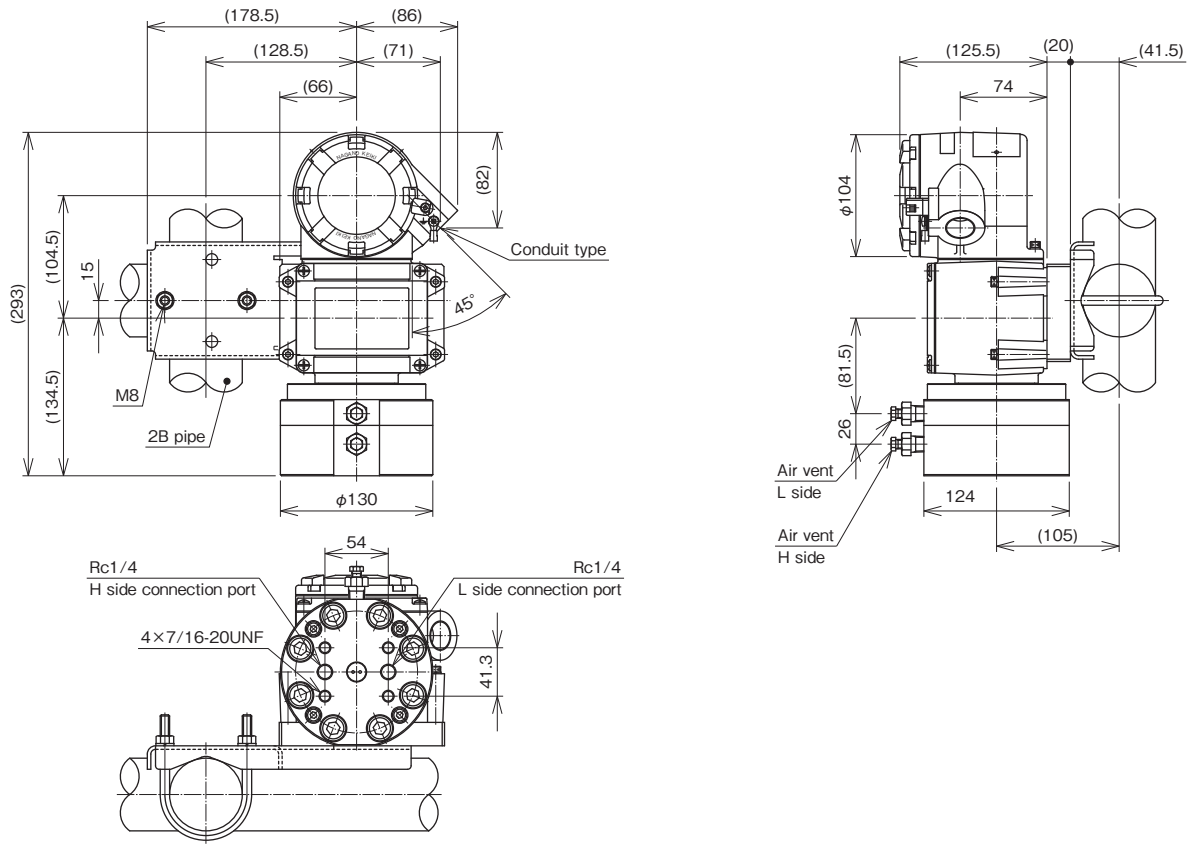

Dimensions 2

Unit: mm

TIIS (Outlet for electric wire: Flameproof packing type)

Panel mounting

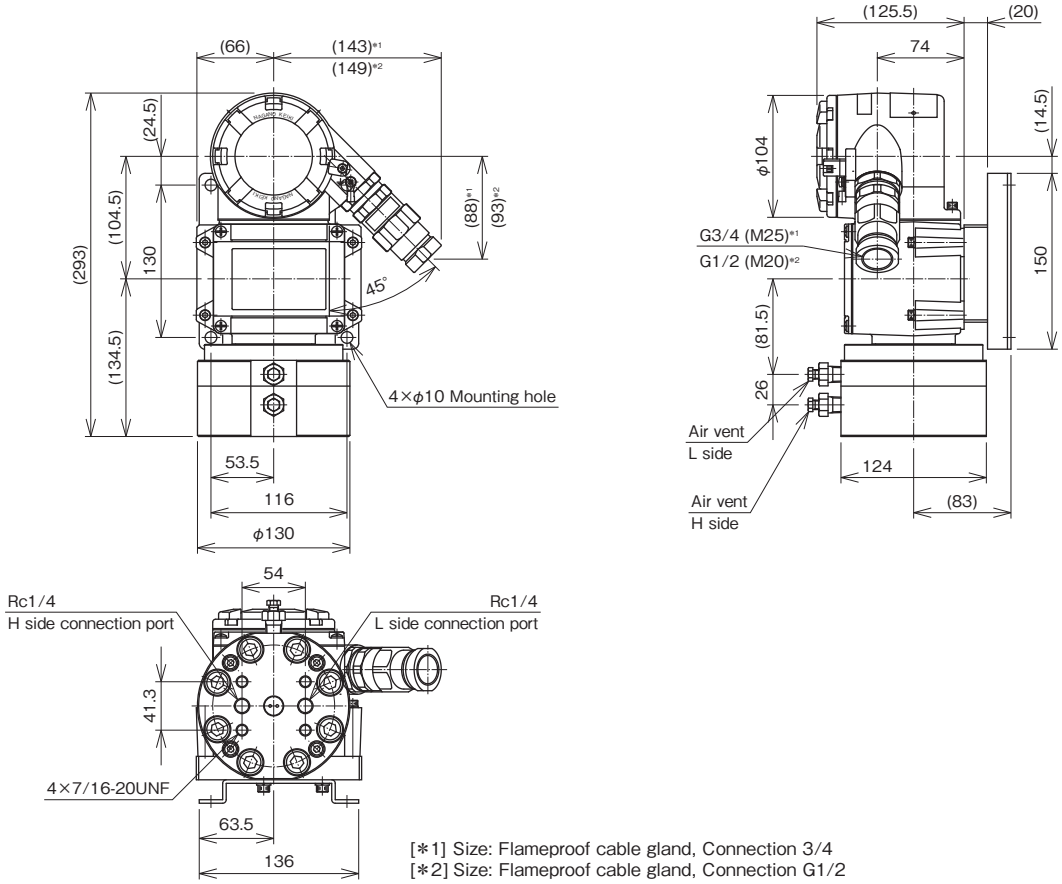

[*1] Size: Flameproof cable gland, Connection 3/4
[*2] Size: Flameproof cable gland, Connection G1/2

2B pipe mounting

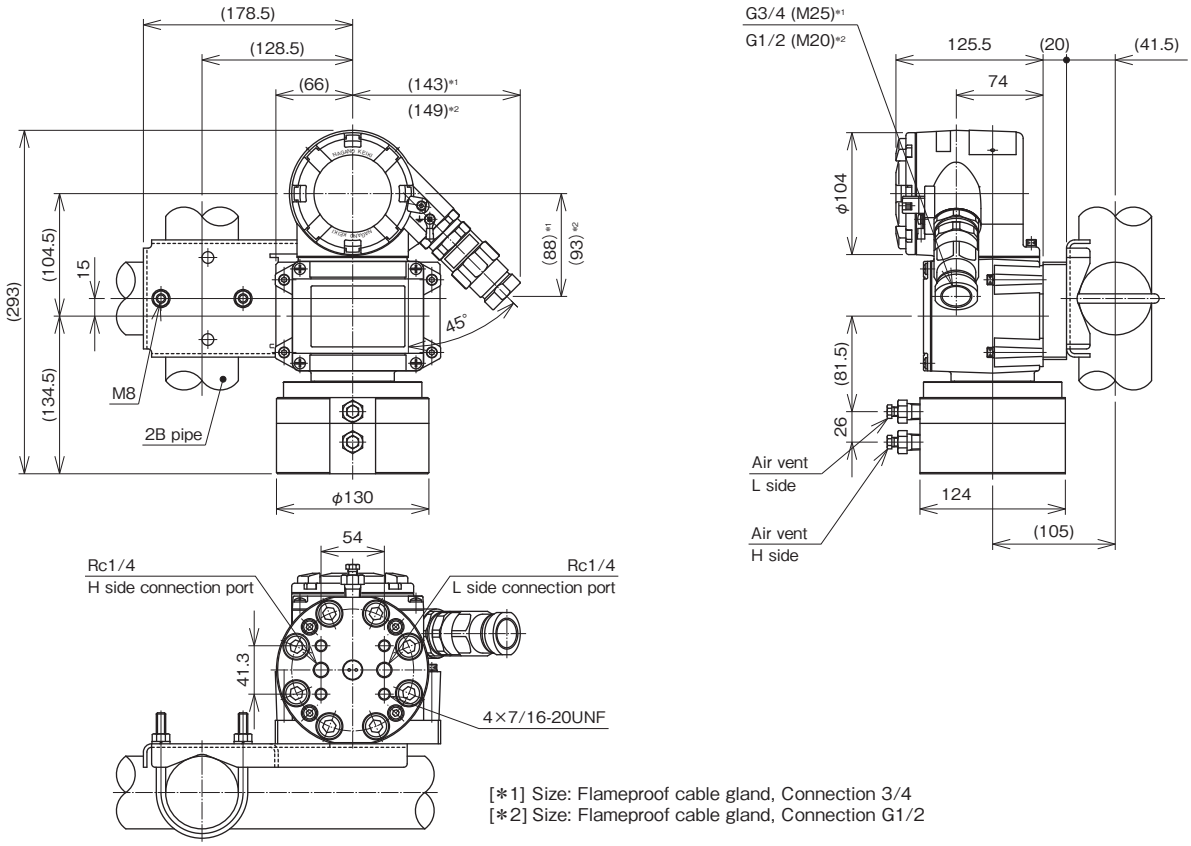

[*1] Size: Flameproof cable gland, Connection 3/4
[*2] Size: Flameproof cable gland, Connection G1/2

Pressure receiving part

Unit: mm

IECEx/KOSHA/ATEX

Differential pressure range
50kPa and below

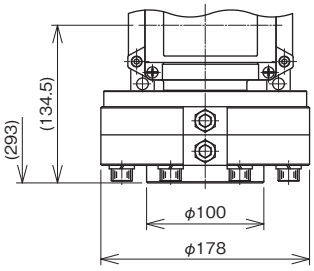

Panel mounting

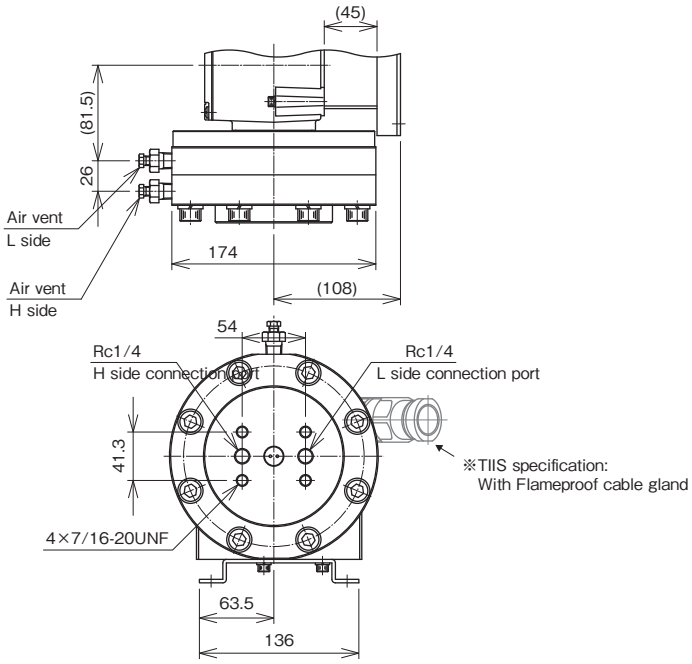

2B pipe mounting

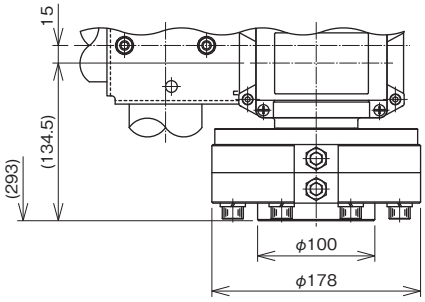

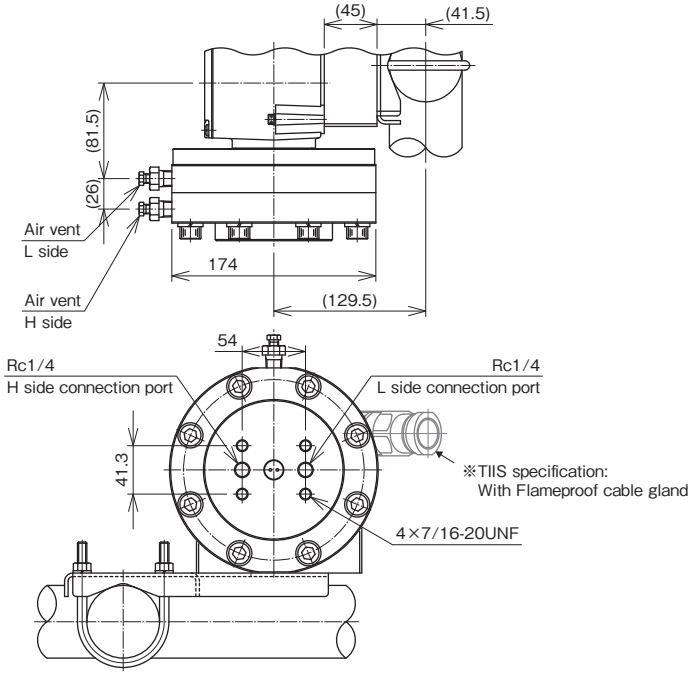

Wiring diagram

One contact (SPDT)

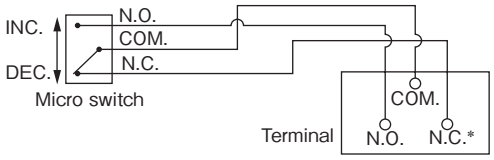

*Please connect the (+) polarity with common terminal COM1 for S.P.D.T. specification for 1 point of contact direct current.

Two contacts (DPDT)

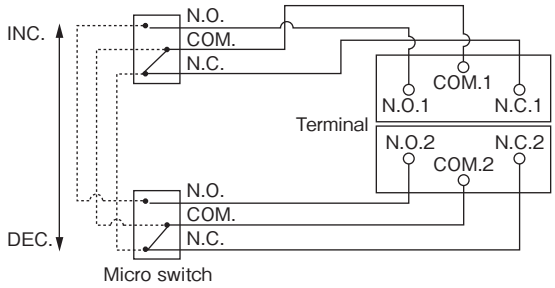

Outlet for electric wire

Conduit Connection	Packing inner diameter (d) ϕ	Applicable cable outside diameter ϕ	Protection tube Connection
M20	7	6 to 7	G1/2
	8	7 to 8	
	9	8 to 9	
	10	9 to 10	
	11	10 to 11	
	12	11 to 12	
M25	11	10 to 11	G3/4
	12	11 to 12	
	13	12 to 13	
	14	13 to 14	
	15	14 to 15	
	16	15 to 16	

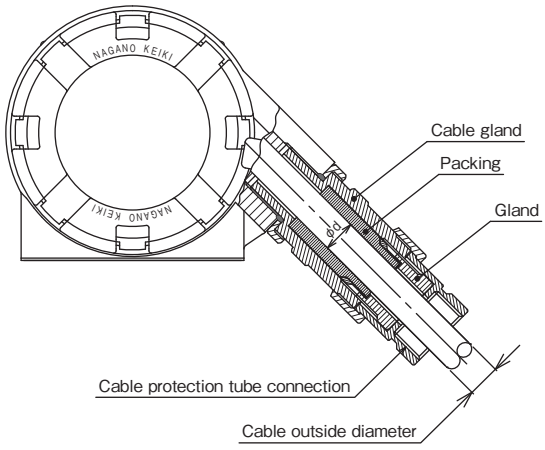

Option

Unit: mm

Manifold valve (FV42-XD3)

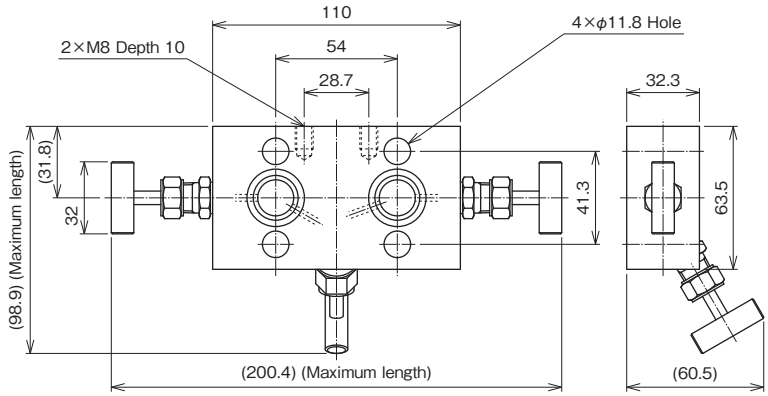

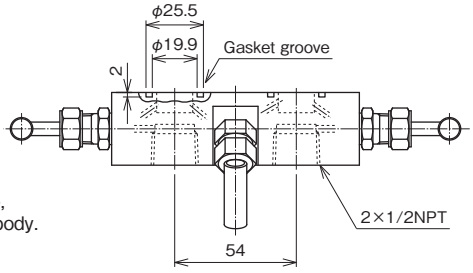

*When ordering with Manifold valve,
it will be shipped attached to the body.

Wetted parts	Accessaries
ASTM A479 316 (SUS316) ASTM A276 316 (SUS316) PTFE	PTFE O-ring×2 pcs. Fixing bolt×4 pcs.

CD81: with Manifold valve

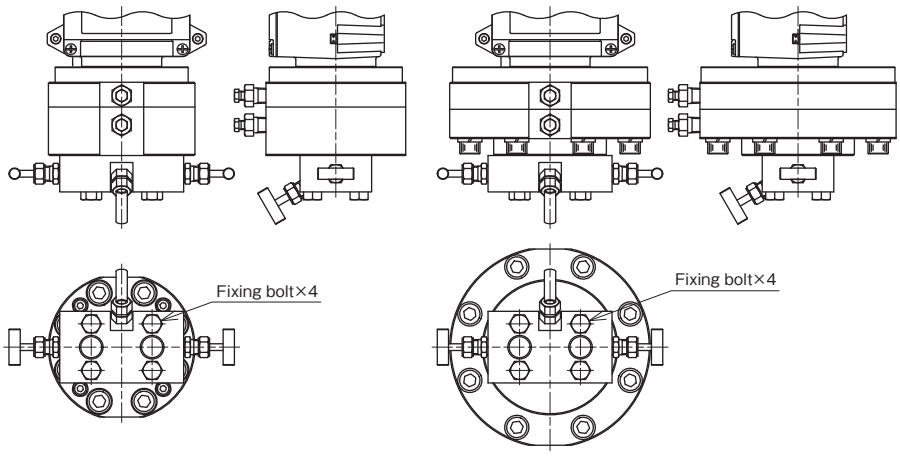

Pressure range: 0.1MPa and above

Pressure range: 50kPa and below

Flameproof

Type approval number certified for explosion protected equipment:

Obtain certification under the IECEx System, an international certification system.

Approval number	
IEC	IECEx CML 16.0024X
TIIS	TC22173X
KOSHA	17-AV4BO-0421X
ATEX	CML 17ATEX1264X

Flameproof enclosure:

Flameproof enclosure refers all-sealed enclosure construction that can withstand the pressure of explosion of the potentially explosive mixture inside, and prevent the transmission of explosion to the potentially explosive atmosphere surrounding the enclosure.
Our pressure switch manufactured in accordance with the principle can be located at factory and other workplaces for use in potentially explosive atmosphere where flammable gas or vapor of combustible liquid exists.

Ex d ⅡB+H_2 T5 Gb:

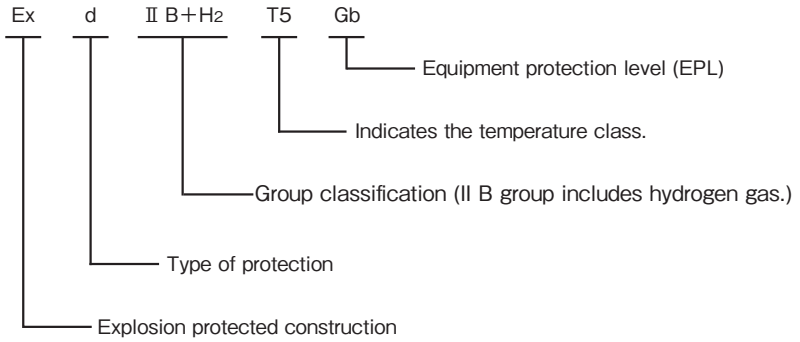

Group classification

Electrical equipment intended for use in potentially explosive atmosphere is classified into group I and II. This pressure switch is classified into II which means suitable for non-mine locations or other workplaces that could be endangered by potentially explosive atmosphere.

Applicable group and classification of gas or steam

Classification of gas or steam	Applicable group		
A	ⅡA	ⅡB	ⅡC
B	—	ⅡB	ⅡC
C	—	—	ⅡC

Ignition point of gas or steam which T5 can apply

Ignition point of gas or steam	Applicable temperature class					
Higher than 450℃	T1	T2	T3	T4	T5	T6
Higher than 300℃	—	T2	T3	T4	T5	T6
Higher than 200℃	—	—	T3	T4	T5	T6
Higher than 135℃	—	—	—	T4	T5	T6
Higher than 100℃	—	—	—	—	T5	T6
Higher than 85℃	—	—	—	—	—	T6

Example of applicable gas or steam

Group \ Temperature class	T1	T2	T3	T4	T5	T6
ⅡA	Acetone Ammonia Carbon monoxide Ethane Acetic acid Ethyl acetate Toluene Propane Benzene Methanol Methane	Ethanol 1-butanol Butane	Hexane	Acetaldehyde		
ⅡB		Ethylene Ethylene oxide		Ethyl methyl Ether		
ⅡC	Hydrogen	Acetylene			Carbon bisulfide	Nitric acid ethyl

Equipment protection level (EPL) classification symbol

Ga: Equipment for explosive atmospheres due to the presence of gas, with a level of protection 'very high', which is not a source of ignition in normal operation, or in case of expected failure or when subjected to a rare failure.
Gb: Equipment for use in explosive atmospheres due to the presence of gas, with a 'high' level of protection that is not the source of ignition in normal operation or when subject to expected malfunctions, although not on a regular basis.
Gc: Equipment for use in explosive atmospheres due to the presence of gas, with a level of protection “increased” that is not a source of ignition in normal operation. It has some additional security measures in order to ensure that it remains a source of ignition not active in case of expected events on a regular basis (for example, the failure of a lamp).

Model number configuration

Please specify the model, each requiring specification and differential pressure range to order.

Model

C D 8 1	—		7		—												
Flameproof Type Differential Pressure Switch		①	②	③		④	⑤	⑥	⑦	⑧	⑨	⑩	⑪	⑫	⑬	⑭	⑮

Model number			Product specifications	Additional specifications (Optional)
① Mounting type (Certifications)	0	Panel mounting	Conduit type	IECEx
	2	2B Pipe Mounting	Conduit type	IECEx
	4	Panel mounting	Flameproof cable gland type	TIIS
	5	2B Pipe Mounting	Flameproof cable gland type	TIIS
	6	Panel mounting	Conduit type	KOSHA
	8	2B Pipe Mounting	Conduit type	KOSHA
	M	Panel mounting	Conduit type	ATEX
	P	2B Pipe Mounting	Conduit type	ATEX

② Connection	7	Rc1/4

③ Switch	0	S.P.D.T. General type with one contact	Diaphragm: Buna-N® O-ring: NBR	＊When measuring water, EPDM is recommended as the wetted material.
	1	S.P.D.T. Direct current type with one contact		
	2	D.P.D.T. Simultaneously operating type with two contacts		
	3	S.P.D.T. General type with one contact	Diaphragm: EPDM O-ring: EPDM	
	4	S.P.D.T. Direct current type with one contact		
	5	D.P.D.T. Simultaneously operating type with two contacts		

Please specify differential pressure range and unit of measure along with corresponding ordering code.

④ Differential pressure range (MPa)	1	5 to 25kPa, 10 to 50kPa	Proof pressure against single port: 8MPa
	2	0.02 to 0.1, 0.04 to 0.2, 0.06 to 0.3, 0.08 to 0.4	Proof pressure against single port: 20MPa
	3	0.1 to 0.5, 0.12 to 0.6, 0.16 to 0.8, 0.2 to 1, 0.3 to 1.5, 0.4 to 2	

⑤ Switch Action / Number of contact	A	H ：Upper limit with one contact
	B	L ：Lower limit with one contact
	D	2H：Simultaneously operating upper limit with two contacts
	E	2L ：Simultaneously operating lower limit with two contacts
		Others

⑥ Switch	0	Standard
	3	Standard + Gold plated (Direct current type not available)
		Others

⑦ Electrical Wire Outlet ⑧ Diameter	⑦Electrical Wire Outlet		⑧Diameter	
	2	Conduit	M	M25×1.5
			N	3/4 NPT Female
	3	Flameproof packing	1	G1/2×Gasket inner size 7mm
			2	G1/2×Gasket inner size 8mm
			3	G1/2×Gasket inner size 9mm
			4	G1/2×Gasket inner size 10mm
			5	G1/2×Gasket inner size 11mm
			6	G1/2×Gasket inner size 12mm
			D	G3/4×Gasket inner size 13mm
			E	G3/4×Gasket inner size 14mm
			F	G3/4×Gasket inner size 15mm
			G	G3/4×Gasket inner size 16mm
		Others (With adapter)		

⑨ Treatment	0	Not required
	1	Use no oil
	2	Use no water
	3	Use no oil & water

⑩ Other Additional Specifications	0	Not required
	1	Manifold valve (Separate order＊1) FV42-XD3 1/2NPT (F)

⑮ Documents	0	Not required
	1	Required (Documents available upon request) Datasheet (Drawing / Specifications) Instruction manual Inspection procedure Mill test report Calibration test report (One-part one sheet) Inspection / Traceability certificate Attending inspection

「Manufacturing range」
- Setting method: Internally adjustable
- Two contacts (Setting dual circuit)

＊1 When ordering with Manifold valve, it will be shipped attached to the body.

＊Specify code "X" to refer N/A